Specification



Sensor:1/2.7″ CMOS Sensor
Horizontal resolution:1200TVI
Pixel size:4.2μm
Aspect ratio:16:9/4:3 selectable
Video system:PAL/NTSC selectable
Field of view (FOV):FOV:112 °
Electronic shutter: Auto
Low-light sensitivity:F1.8/0.01Lux
White balance: Auto
Operating voltage:5V-24V
Noise reduction:2D
Day and night:COLOR
OSD Menu: Support
Input voltage:5V-24V
Operating temperature:-20℃-70℃
Operating current:95mA@12V
Lens:2.1mm
Language: Chinese/English
Scene mode: Auto/Color/B&W/EXT
Size:19X19X27.6mm
Weight:7.3g

Interface Description

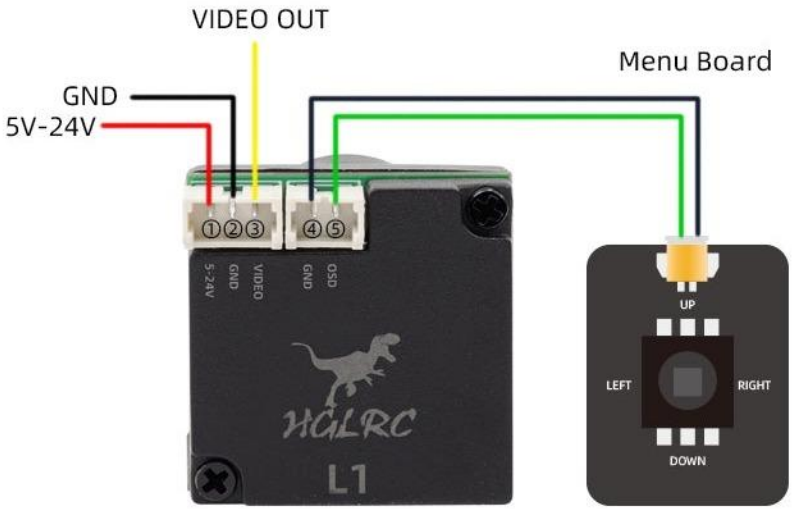

*Short press the middle button on the menu board to enter OSD settings; after completing the settings, remove the OSD menu board

Pin Definition

①	POWER	5V-24V
②	GND	GND
③	CVBS	CVBS VIDEO SIGNAL
④	GND	GND
⑤	OSD	OSD

Size/Weight

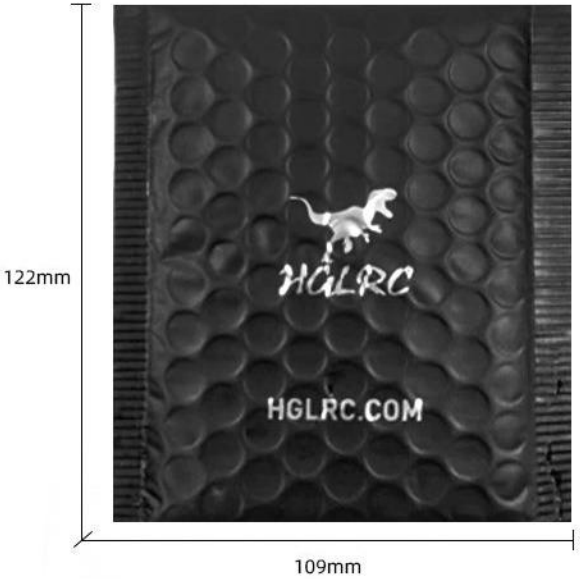



Total weight:18.9g

Weight:7.3g